Change Management Request – Enhancements to the Gate Pass PowerApps Application RFS-1-12458101461

1. Overview

This Change Management Request (CMR) details the planned deployment of enhancements for the Gate Pass PowerApps application. The improvements include a role-based side menu, new workflows for Consultants/Interns/UNVs, an at-a-glance dashboard, archiving capabilities, performance optimizations, and the migration of the data source from the Azure SQL Database using SQL Premium connector to a SharePoint list using SharePoint connector. These updates will streamline navigation, reduce licensing costs, and deliver a more responsive experience for all user roles.

2. Objectives and Scope

Objective:

1. Replace the SQL Premium connector with a SharePoint connector to reduce licensing costs and simplify maintenance. The application's data source will be migrated from Microsoft Azure SQL Server to SharePoint Online (SPO)
2. Provide a revamped UI in PowerApps that improves task discoverability and efficiency.
3. Introduce approval workflows for Consultants, Interns, and UNVs.
4. Add a dashboard screen within the canvas app for key metrics.
5. Enable archiving of stale records using a SharePoint list view.
6. Improve app load times and responsiveness.

Scope:

1. App Components Affected:
2. Home Screen (side menu, quick links)
3. Role-Based Side Menu component
4. Consultant/Intern/UNV approval workflows
5. Dashboard Screen & Archive feature
6. Data source migration: SQL Premium connector ⟶ SharePoint connector

New UI

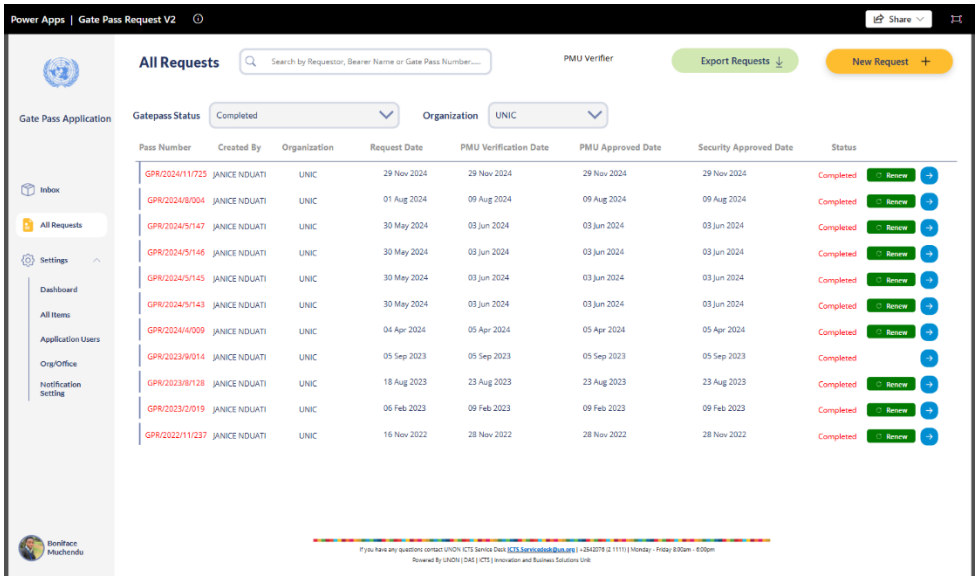

Old UI

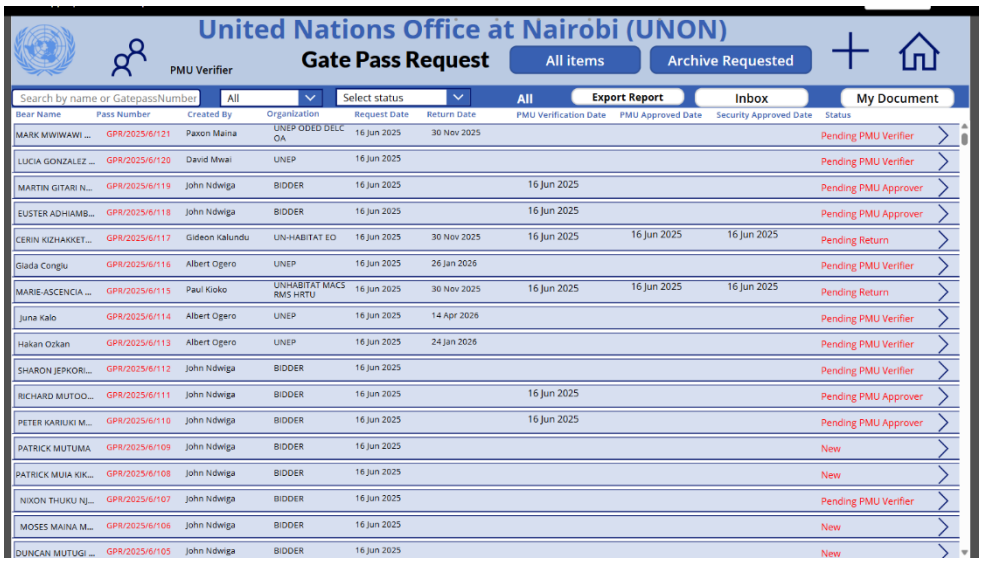

Dashboard Screen & Archive feature

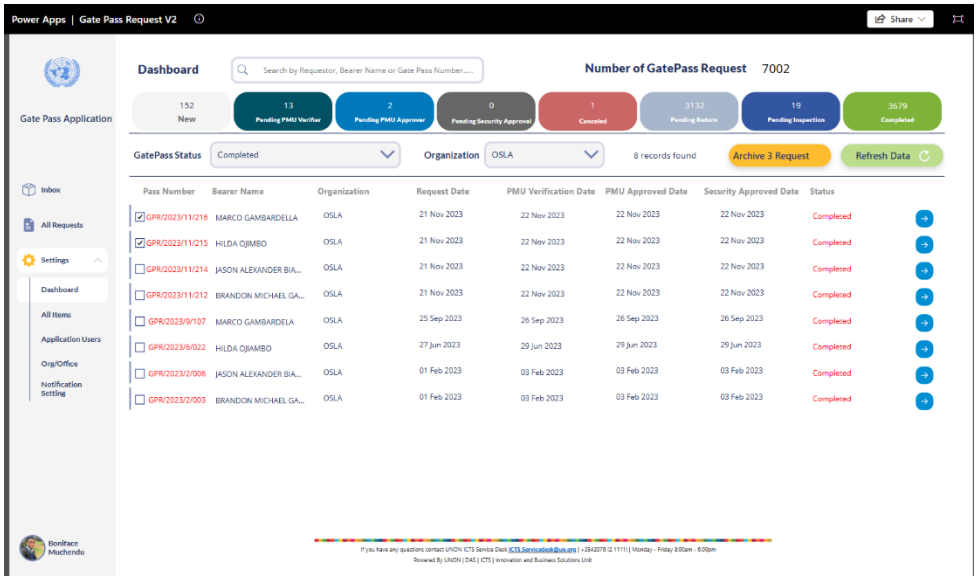

3. Risk and Mitigation

- **Risk 1**: End users may be temporarily disoriented by the new UI layout in PowerApps Mitigation: A user manual has been developed to guide users through the updated menus and navigation changes.
  UNON ICTS-Gate Pass Users Manual - May 07, 2025.docx

4. Timelines

To minimize user impact, deployment occurs during a scheduled maintenance window on the weekend.

Pre-deployment Steps (Dev Testing):

Friday, 20 June 2025:

- Export the updated PowerApps solution to Production Environment.
- Run tests: navigation, approval submission, dashboard load, archive action.

Production Deployment:

Saturday, 21 June 2025:

- Disable the Production app to prevent user access.
- Publish the finalized PowerApps solution.
- Execute tests to verify key functionalities: role-based menu, request creation/storage, archive actions, dashboard metrics, and approval flows.
- ECA to update the link on Home Page - UNON Applications Portal

5. Impact to End User

Expected Impact:

- App Downtime: ~ unavailability while the solution is imported and published.
- User Experience: Upon first launch, users see updated screens and may need a moment to adjust.

Severity: Low

The brief downtime is pre-announced and scheduled during off-peak hours (weekend evening).

6. Testing / Pilot / POC

Development & Testing:

1. Role-based side menu visibility for Administrator, Consultant, Intern, UNV, and Supervisor.
2. Creation of new Gate Pass request ⟶ data stored in SharePoint list.
3. Bulk archive/unarchive in Dev environment.
4. Dashboard metrics (Count of Pending, Approved, Completed, Archived).
5. Power Automate approval flow triggers and email/in-app notifications.

Pilot Scope:

Completed: A soft launch was conducted with the ICTS support team using the Development Environment. PMU has also been given time to test the application.

Test Screen for Request Cancellation

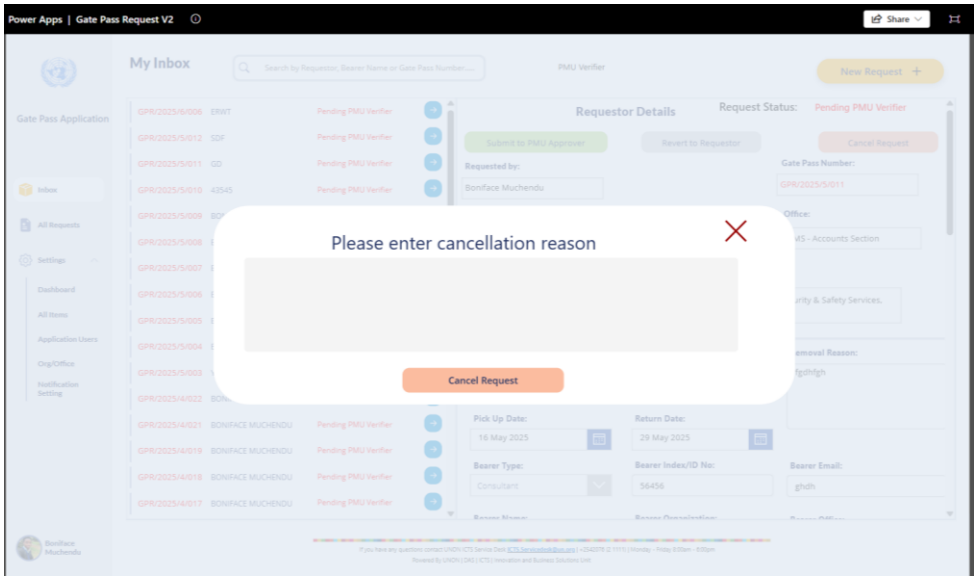

7. Configuration

PowerApps Solution Import (Production):

- In the Production environment, navigate to **Power Apps ⟶ Solutions ⟶ Import.**

App Settings (App Module):

- Open the imported Canvas App in Power Apps Studio (Production).
- Check **OnStart** formula: ensure the SharePoint connection variable is set correctly:
- Verify that any environment variables are used for site and list lookups.

Power Automate Flows Update:

- In Power Automate, open each approval flow related to Gate Pass.

SharePoint List Validation:

- Confirm list columns in Production match the data shape used in Dev:

Security Roles & Permissions:

- Verify each PowerApps user group's access to the new SharePoint list:

  GatePassAdmins: Full control.

GatePassUsers: Contribute (to create new items).

Publishing & Versioning:

After importing, click Save ⟶ Publish in Power Apps Studio.

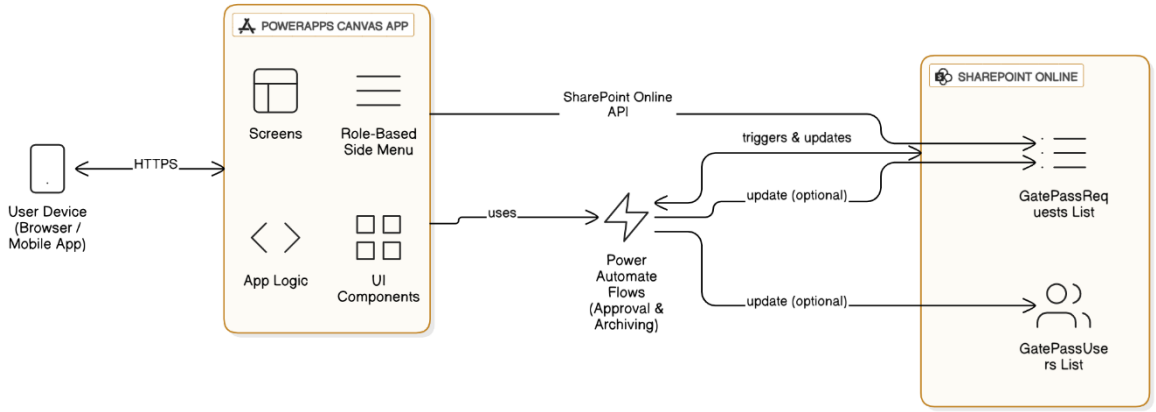

After deploying notify the stakeholders Vesna Vurdelja, Paul Kioko, Alex Ogoma Nyasaka, Edwin Kurei Wamugunda

8. Rollback Plan

In case of a critical failure, revert to the previous stable solution and SQL Premium connector

---

Prepared by:
Boniface Michuki Muchendu
Information Technology Assistant, UNON/ICTS
Date: 9 June 2025